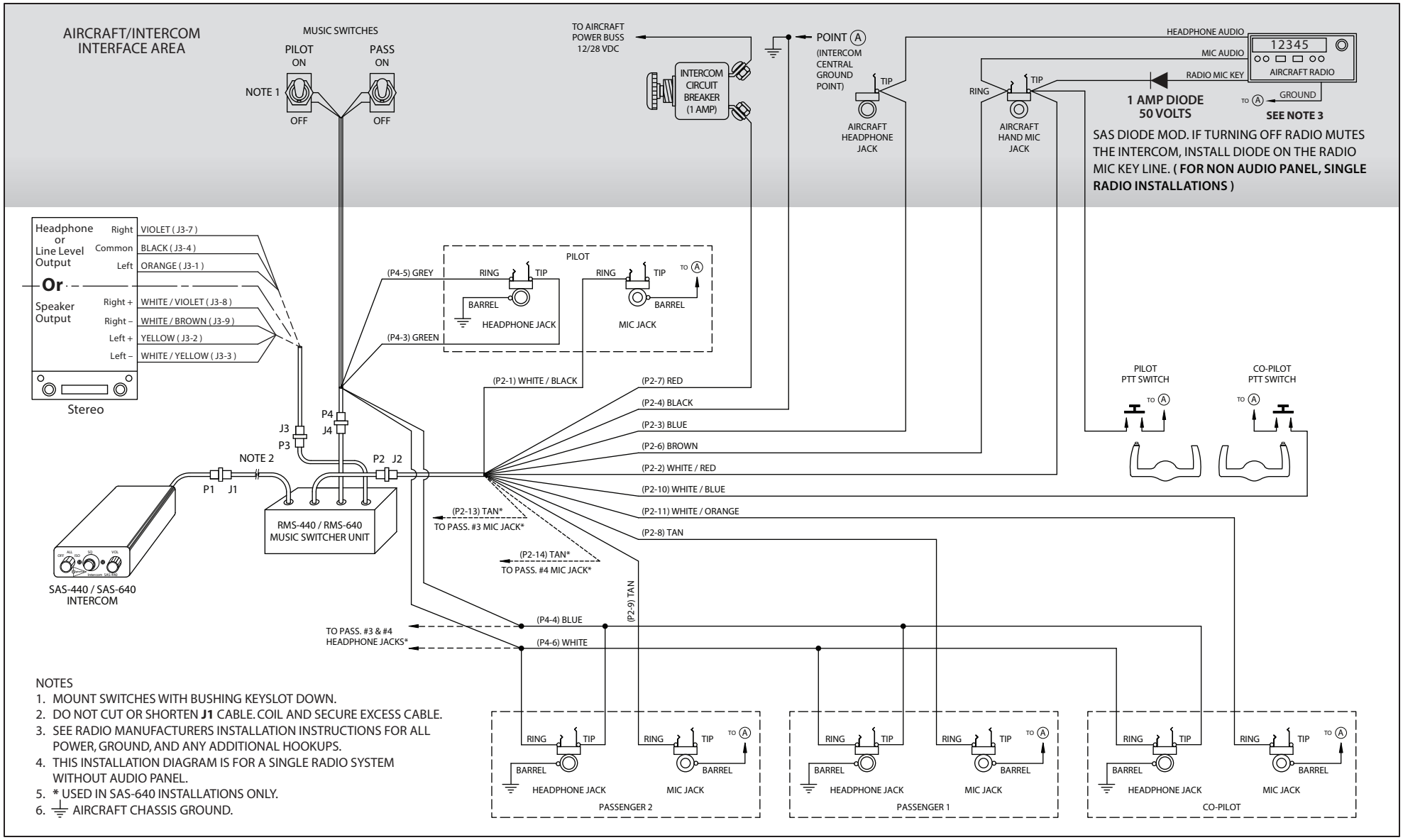

NOTES

1. MOUNT SWITCHES WITH BUSHING KEYSLOT DOWN.
2. DO NOT CUT OR SHORTEN **J1** CABLE. COIL AND SECURE EXCESS CABLE.
3. SEE RADIO MANUFACTURERS INSTALLATION INSTRUCTIONS FOR ALL POWER, GROUND, AND ANY ADDITIONAL HOOKUPS.
4. THIS INSTALLATION DIAGRAM IS FOR A SINGLE RADIO SYSTEM WITHOUT AUDIO PANEL.
5. * USED IN SAS-640 INSTALLATIONS ONLY.
6. ⏚ AIRCRAFT CHASSIS GROUND.

ST-440 / ST-640 – No Audio Panel (Single Radio) Installation Wiring Diagram

Sigtronics Corporation
178 East Arrow Highway
San Dimas, CA 91773

Telephone: (909) 305-9399
E-mail: info@sigtronics.com
Web: www.sigtronics.com

The above information has been checked for accuracy, however it is presented for use as is. Sigtronics is not liable for damage to radio equipment using this data. It is the sole responsibility of the technician to verify the usability of this information for their particular radio.

9-11-2015 ST-440-640_Diode_Mod_Inst.pdf